Georgia State
International Residential Code

Appendix R
Disaster Resilient Construction

(2012 Edition)

PROPOSED

Georgia Department of Community Affairs
Local Government Assistance Division
60 Executive Park South, N.E.
Atlanta, Georgia 30329-2231
(404) 679-3118
www.dca.ga.gov

January 1, 2013

GEORGIA STATE INTERNATIONAL RESIDENTIAL CODE
APPENDIX R
DISASTER RESILIENT CONSTRUCTION

The INTERNATIONAL RESIDENTIAL CODE, 2012 Edition, published by the International Code Council, when used in conjunction with the Georgia State Amendments to the INTERNATIONAL RESIDENTIAL CODE, 2012 Edition and Appendix R Disaster Resilient Construction , shall constitute the official *Georgia State Minimum Standard Residential Code.*

FORWARD

Introduction

The Department of Community Affairs (DCA) was awarded a grant through the U.S. Department of Housing and Urban Development (HUD) to develop Disaster Resilient Building Code (DRBC) Appendices for the International Building Code (IBC) and the International Residential Code (IRC). The DRBC Appendices are optional regulations that local jurisdictions may adopt, in whole or in part, through local ordinance. A task force of stakeholders was appointed to look for opportunities to improve any code provisions relating to damage from hurricane, flood, and tornado disasters. In addition to the approved recommendations from the task force, the state has developed and will conduct a comprehensive training program for code enforcement officials on the importance, implementation and enforcement of the Disaster Resilient Construction Appendices.

The meetings for the Disaster Resilient Building Code Appendices Task Force were open to the public, interested individuals and organizations that desired participation. The technical content of currently published documents on flooding, high-wind construction, and storm shelters, were used and referenced. Those publications included documents of the International Code Council (ICC), American Society of Civil Engineers (ASCE), the Federal Emergency Management Agency (FEMA), Mitigation Assessment Team (MAT) Program, Georgia Emergency Management Agency/Homeland Security (GEMA), APA – The Engineered Wood Association, National Institute of Standards and Technology (NIST), National Oceanic and Atmospheric Administration (NOAA), National Science Foundation (NSF), The State of Florida, American Forest & Paper Association's American Wood Council, Southern Forest Products Association, NAHB Research Center, Insurance Institute for Business & Home Safety, and the Federal Alliance for Safe Homes.

Adoption

Local jurisdictions may adopt this entire appendix with chosen options or specific sections that apply to their communities through a local ordinance. The adopting ordinance must also be filed on record with DCA. A sample ordinance has been included in this document to assist the local jurisdictions with the adoption process. Recommended training is being offered to assist code enforcement officials in the implementation and enforcement of the appendices documents. Contact DCA at (404) 679-3118 or www.dca.ga.gov for more information.

Neither The Disaster Resilient Building Code Appendices Task Force, its members nor those participating in the development of Appendix R Disaster Resilient Construction accept any liability resulting from compliance or noncompliance with the provisions of Appendix R Disaster Resilient Construction.

The 2012 Disaster Resilient Building Code (DRBC) Appendices Task Force was charged with the development of two appendices. One appendix is for the International Residential Code and the other appendix is for the International Building Code. These two appendices look for opportunities to improve any provisions relating to hurricane, flood, and tornado disasters. In addition to improving existing provisions in the codes, the task force also developed new provisions to be included in the appendices that address these issues. These appendices contain increased construction requirements for disaster resilience and are intended to be made available for adoption by local jurisdictions in the State of Georgia.

These appendices have reasonable and substantial connection with the public health, safety, and general welfare. In addition, the financial impact and costs associated with these appendices have been taken into consideration.

PROPOSED

Members:
Mr. Gregori Anderson, Chairman, States Codes Advisory Committee (SCAC)
Mr. David L. Adams, , Vice Chairman, States Codes Advisory Committee (SCAC)
Mr. Bill Abballe, AIA, American Institute of Architects (AIA) – Georgia Chapter
Mr. John Hutton, P.E., S.E., American Council of Engineering Companies of Georgia (ACEC/G)
Mr. Ron Anderson, Code Consultant
Mr. Lamar Smith, Home Builders Association of Georgia (HBAG)
Mr. Thomas Harper, Georgia State Inspectors Association (GSIA)
Mr. Tom Buttram, Building Officials Association of Georgia (BOAG)
Capt. Zane Newman, Georgia State Fire Marshal's Office (Local Fire Official)
Mr. Terry Lunn, Georgia Emergency Management Agency (GEMA)
Mr. Alan Giles, CFM, Georgia Department of Natural Resources (EPD / Floodplain Management Unit)
Mr. Tony Hebert, HUD Georgia State Representative (Region IV Office)
Mr. Jim C. Beck, Sr., Georgia Underwriting Association
Mr. Tim Thornton, Georgia Association of Realtors (GAR)
Mr. Steve Harrison, Building Owners and Managers Association – Georgia (BOMA)
Mr. Tom Aderhold, Georgia Apartment Association (GAA)
Mr. Tim Bromley, Accessibility Consultant – Georgia State ADA Coordinator's Office
Mayor Mark Mathews, Georgia Municipal Association (GMA)
Commissioner Jeff Long, Association of County Commissioners of Georgia (ACCG)

Ad Hoc Subcommittee:
Mr. Tom Buttram, Chairman, DRBC Task Force Liaison (BOAG)
Mr. Ron Anderson, Vice Chairman, Code Consultant
Mr. Stephen V. Skalko, P.E. Concrete Industry
Mr. Jeffrey B. Stone, PhD., Wood Industry (AWC)
Mr. Robert Wills, Steel Industry (AISC)
Mr. Tom Cunningham, PhD., Residential Building Design
Mr. Duncan J. Hastie, P.E., Disaster Mitigation

DCA Staff:
Mr. Ted Miltiades, Director of Construction Codes & Industrialized Buildings
Mrs. Deirdre "Dee" Leclair, DRBC Grant Project Manager
Mr. Max Rietschier, Lead Codes Consultant
Mr. Bill Towson, 2012 International Residential Code Task Force Liaison, Code Consultant
Mr. Calvin Jordan, 2012 International Building Code Task Force Liaison, Code Consultant

PROPOSED

How to Use *Appendix R Disaster Resilient Construction*

The appendix may be adopted in whole or in part by Local Jurisdictions to fit the needs of their community. The following sample ordinance has been provided to aid in the process of indentifying Chapters and Sections of the appendix that may be adopted. The format easily allows for choosing to adopt, revise or delete individual Chapters and Sections. Download the MS Word (.doc) version from the DCA website to take advantage of the dropdown menu choices and edit ability features of the document. Note that in Chapter 3, choose one of three options for flood elevation. Only one option may be chosen and that option must be higher than what has been previously adopted and enforced by your jurisdiction. Also note that in Chapter 4, choose one of four options for increased wind speed. Only one option may be chosen and that option must be higher than the mapped wind speed shown in the International Residential Code. The Sample Ordinance document takes into account the flood elevation option in Chapter 3 and the wind speed option in Chapter 4 of this appendix.

SAMPLE ORDINANCE FOR ADOPTION OF

GEORGIA STATE INTERNATIONAL RESIDENTIAL CODE

APPENDIX R

DISASTER RESILIENT CONSTRUCTION

ORDINANCE NO._____

An ordinance of the **[JURISDICTION]** adopting the latest edition as adopted and amended by the Georgia Department of Community Affairs of *Appendix R Disaster Resilient Construction* regulating and governing the mitigation of hazard to life and property from natural weather related disasters, high-wind damages, flooding, and establishing construction standards for storm shelters in the **[JURISDICTION]**; providing for the issuance of permits and collection of fees therefore; repealing Ordinance No. ____ of the **[JURISDICTION]** and all other ordinances or parts of the laws in conflict therewith.

The **[GOVERNING BODY]** of the **[JURISDICTION]** does ordain as follows:

Section 1. That a certain document, three (3) copies of which are on file in the office of the **[TITLE OF JURISDICTION'S KEEPER OF RECORDS]** of **[NAME OF JURISDICTION]**, being marked and designated as *Appendix R Disaster Resilient Construction* to the International Residential Code, the latest edition as adopted and amended by the Georgia Department of Community Affairs, be and is adopted as the *Appendix R Disaster Resilient Construction* of the **[JURISDICTION]**, in the State of Georgia for regulating and governing the mitigation of hazard to life and property from natural weather related disasters, high-wind damages, flooding, and establishing construction standards for storm shelters; providing for the issuance of permits and collection of fees therefore; and each and all of the regulations, provisions, penalties, conditions and terms of said *Appendix R Disaster Resilient Construction* on file in the office of the **[JURISDICTION]** are hereby referred to, adopted, and made a part hereof, as if fully set out in this ordinance, with the additions, insertions, deletions and changes, if any prescribed in Section 2 of this ordinance.

Section 2. [NAME Of JURISDICTION] hereby:

Choose an item. CHAPTER AR1 SCOPE AND ADMINISTRATION Choose an item.

Choose an item. SECTION AR101 ADMINISTRATION Choose an item.

Choose an item. AR101.1 Purpose Choose an item.

Choose an item. AR101.2 Objectives Choose an item.

Choose an item. AR101.3 Scope Choose an item.

AR101.3.1 Insert [Name Of Jurisdiction] for [NAME OF JURISDICTION].

Choose an item. AR101.4 Violations Choose an item.

Insert [Name Of Jurisdiction] for [NAME OF JURISDICTION].

Choose an item. SECTION AR102 APPLICABILITY Choose an item.

Choose an item. AR102.1 General Choose an item.

Choose an item. AR102.2 Other laws Choose an item.

Choose an item. AR102.3 Referenced codes and standards Choose an item.

Choose an item. SECTION AR103 POST DISASTER EVENT INSPECTIONS GUIDLINES Choose an item.

Choose an item. AR103.1 Inspections Choose an item.

Choose an item. AR103.1.1 Right of entry Choose an item.

Choose an item. AR103.2 Types of inspections Choose an item.

Choose an item. AR103.3 Post disaster building safety evaluation chart Choose an item.

Choose an item. Figure AR103.3 Post Disaster Building Safety Evaluation Chart Choose an item.

Choose an item. AR103.4 Evaluation forms Choose an item.

Insert [Name Of Jurisdiction] for [NAME OF JURISDICTION].

Choose an item. AR103.5 Placement and remove of placards Choose an item.

Choose an item. CHAPTER AR2 DEFINITIONS Choose an item.

Choose an item. SECTION AR201 GENERAL Choose an item.

Choose an item. AR201.1 Scope Choose an item.

PROPOSED

Choose an item. AR201.2 Terms defined in other codes Choose an item.
Choose an item. AR201.3 Terms not defined Choose an item.
Choose an item. SECTION AR202 DEFINITIONS Choose an item.
Choose an item. CHAPTER AR3 FLOOD-RESISTANT CONSTRUCTION Choose an item.
Choose an item. SECTION AR301 HAZARD IDENTIFICATION Choose an item.
Choose an item. AR301.1 Identification of flood hazard areas Choose an item.
Insert [Name Of Jurisdiction] for [NAME OF JURISDICTION].
Insert [Date] for [INSERT DATE ISSUANCE].
Choose an item. SECTION AR302 SCOPE Choose an item.
Choose an item. AR302.1 Flood loads Choose an item.
Choose an item. FLOOD ELEVATION OPTION Choose an item. Choose an item.
Choose an item. SECTION AR303 FLOOD DAMAGE-RESISTANT MATERIALS Choose an item.
Choose an item. AR303.1 Flood damage-resistant materials Choose an item.
Choose an item. AR303.2 Location of flood damage-resistant materials Choose an item.
Choose an item. AR303.3 Fasteners and connectors used for flood-resistant materials Choose an item.
Choose an item. CHAPTER AR4 HIGH-WIND RESISTIVE CONSTRUCTION Choose an item.
Choose an item. SECTION AR401 GENERAL Choose an item.
Choose an item. AR401.1 Scope Choose an item.
Choose an item. AR401.2 Continuous load path Choose an item.
Choose an item. AR401.3 Adoption of wind speed Choose an item.
[Name Of Jurisdiction] adopts Option Choose an item.
Choose an item. SECTION Choose an item. Choose an item.
Choose an item. SECTION AR406 FASTENERS AND CONNECTIONS FOR CLADDING Choose an item.
Choose an item. AR406.1 Fasteners and connectors for cladding Choose an item.
Choose an item. SECTION AR407 FENESTRATION Choose an item.
Choose an item. AR407.1 Design pressure Choose an item.
Choose an item. AR407.2 Anchorage methods Choose an item.
Choose an item. SECTION AR408 ROOFING Choose an item.
Choose an item. AR408.1 Secondary water barrier Choose an item.
Choose an item. AR408.2 Fasteners Choose an item.
Choose an item. AR408.3 Attachment Choose an item.
Choose an item. CHAPTER AR5 RESIDENTIAL STORM SHELTERS AND SAFE ROOMS Choose an item.
Choose an item. SECTION AR501 GENERAL Choose an item.
Choose an item. AR501.1 General Choose an item.
Choose an item. SECTION AR502 RESIDENTIAL STORM SHELTERS AND SAFE ROOMS Choose an item.
Choose an item. AR502.1 Residential storm shelters Choose an item.
Choose an item. AR502.2 Residential safe rooms Choose an item.

PROPOSED

Section 3. That Ordinance No. ____ of **[JURISDICTION]** entitled **[FILL IN HERE THE COMPLETE TITLE OF THE LEGISLATION OR LAWS IN EFFECT AT THE PRESENT TIME SO THAT THEY WILL BE REPEALED BY DEFINITE MENTION]** and all other ordinances or parts of laws in conflict herewith are hereby repealed.

Section 4. That if any section, subsection, sentence, clause or phrase of this ordinance is, for any reason, held to be unconstitutional, such decision shall not affect the validity of the remaining portions of this ordinance. The **[GOVERNING BODY]** hereby declares that it would have passed this law, and each section, subsection, clause or phrase thereof, irrespective of the fact that any one or more sections, subsections, sentences, clauses and phrases be declared unconstitutional.

Section 5. That nothing in this ordinance or in *Appendix R Disaster Resilient Construction* hereby adopted shall be construed to affect any suit or proceeding impending in any court, or any rights acquired, or liability incurred, or any cause or causes of

action acquired or existing under any act or ordinance hereby repealed as cited in Section 3 of this ordinance; nor shall any just or legal right or remedy of any character be lost, impaired or affected by this ordinance.

Section 6. That the **[JURISDICTION'S KEEPER OF RECORDS]** is hereby ordered and directed to cause this ordinance to be published. (An additional provision may be required to direct the number of times the ordinance is to be published and to specify that it is to be in a newspaper in general circulation. Posting may also be required.)

Section 7. That this ordinance and the rules, regulations, provisions, requirements, orders and matters established and adopted hereby shall take effect and be in full force and effect **[TIME PERIOD]** from and after the date of its final passage and adoption.

Section 8. Chapter AR6 Resources of this document is intended to be used by the building officials as a resource guide.

PROPOSED

TABLE OF CONTENTS

CHAPTER AR1 Scope and Administration 8
Section
AR101 Administration 8
AR102 Applicability 8
AR103 Post Disaster Event Inspections Guidelines . . . 9

CHAPTER AR2 Definitions 11
Section
AR201 General 11
AR202 Definitions 11

CHAPTER AR3 Flood-resistant Construction 12
Section
AR301 Hazard Identification 12
AR302 Scope 12
AR303 Flood Damage-Resistant Materials 12

CHAPTER AR4 High-wind Resistive Construction 13
Section
AR401 General 13
AR402 Option A – Minimum Wind Speed 100 MPH .13
AR403 Option B – Minimum Wind Speed 110 MPH .19
AR404 Option C – Minimum Wind Speed 120 MPH .19
AR405 Option D – Minimum Wind Speed 130 MPH .19
AR406 Fasteners and Connectors for Cladding 19
AR407 Fenestrations 19
AR408 Roofing 20

CHAPTER AR5 Residential Storm Shelters and Safe Rooms 21
Section
AR501 General 21
AR502 Residential Storm Shelters and Safe Rooms . . .21

CHAPTER AR6 Resources 22
Section
AR601 Contacts 22
AR602 Emergency Inspection Kit 22
AR603 Safety Tips 23
AR604 Major Disaster Process 23
AR605 Sample Evaluation Forms and Inspected Placards 23

CHAPTER AR7 References 30

INDEX OF FIGURES 30

PROPOSED

APPENDIX R
DISASTER RESILIENT CONSTRUCTION

CHAPTER AR1
SCOPE AND ADMINISTRATION

SECTION AR101
ADMINISTRATION

AR101.1 Purpose. The scope of this appendix is to promote enhanced public health, safety and general welfare and to reduce public and private property losses due to hazards and natural disasters associated with flooding, high-winds, and windborne debris above that which is provided in the general provisions of this appendix.

AR101.2 Objectives. The objectives of this appendix are to:

1. Protect human life, to minimize property loss and to minimize the expenditures of public money associated with natural weather related disasters, including flooding, tornadoes and other high-wind events.
2. Establish enhanced design and construction regulations consistent with nationally recognized good practices for the safeguarding of life and property.

AR101.3 Scope.

AR101.3.1 The provisions of this appendix are not mandatory unless specifically referenced in an adopting ordinance of **[NAME OF JURISDICTION]**. If adopted, the provisions shall apply to all new development and to substantial improvements to existing development.

AR101.3.2 The provisions of this appendix supplement the jurisdiction's building codes to provide for enhanced provisions to mitigate the hazard to life and property from natural weather related disasters, including flooding, tornadoes and other high-wind events.

AR101.3.3 The provisions of this appendix establish design and construction standards for storm shelters.

AR101.4 Violations. Any violation of a provision of this appendix or failure to comply with a permit of variance issued pursuant to this appendix or any requirement of this appendix shall be handled in accordance with the ordinances of **[NAME OF JURISDICTION]**.

SECTION AR102
APPLICABILITY

AR102.1 General. This appendix provides enhanced minimum requirements for development of new construction and substantial improvement of existing development above that contained in the *International Residential Code* (IRC).

AR102.1.1 Regardless of the category of work being performed, the work shall not cause the structure to become unsafe or adversely affect the performance of the building; shall not cause an existing mechanical or plumbing system to become unsafe, hazardous, insanitary or overloaded; and unless expressly permitted by these provisions, shall not make the building any less compliant with this appendix or to any previously approved alternative arrangements than it was before the work was undertaken.

AR102.1.2 Where there is a conflict between a requirement of the *International Residential Code* and a requirement of this appendix, the requirement of this appendix shall govern. Where there is a conflict between a general requirement of this appendix and a specific requirement of this appendix, the specific requirement shall govern. Where, in any specific case, different sections of this appendix specify different materials, methods of construction or other requirements, the most restrictive shall govern.

AR102.2 Other laws. The provisions of this appendix shall not be deemed to nullify any provisions of local, state or federal law.

AR102.3 Referenced codes and standards. The codes and standards referenced in this appendix shall be those that are listed in Chapter AR7 and such codes and standards shall be considered as part of the requirements of this appendix to the prescribed extent of each such reference. Where differences occur between provisions this appendix and references and standards, the provisions of this appendix shall apply.

PROPOSED

SECTION AR103
POST DISASTER EVENT INSPECTIONS GUIDELINES

AR103.1 Inspections. The building official or agents shall inspect residential buildings and structures to determine the habitability of each with the goal of getting the community back into their residences quickly and safely. Inspections shall always be performed by teams of at least two individuals, also known as disaster assessment teams.

AR103.1.1 Right of entry. Unless permitted under the exigent circumstances provisions or from an order from State or Federal Authorities, disaster assessment teams shall confirm the right of entry requirements with the incident commander. Upon approval, the assessment teams shall be authorized to enter the structure or premises at reasonable times to inspect or perform duties as provided by this code, provided that the structure or premises be occupied, that credentials are presented, that entry is requested, and that entry is granted by the owner or person having charge over the structure or premises.

AR103.2 Types of inspections.

AR103.2.1 Rapid evaluation. Rapid evaluation is performed after a disaster event to determine if a building is apparently safe or obviously unsafe. The evaluation should last 10 to 30 minutes per building and shall be performed by the building official and/or their designated responders. Evaluation shall determine if a detailed evaluation is necessary. Placards are posted on buildings indicating status as one of the following:

1. INSPECTED
2. RESTRICTED USE
3. UNSAFE

See Section AR605 for Placards that may be reproduced for use in the field during evaluations. The jurisdiction shall alter placards to meet the jurisdiction and building department's requirements.

AR103.2.2 Detailed evaluation. Detailed evaluation is a thorough visual examination of a damaged building performed by a team of two, including an inspector and a design professional. Evaluation should last 30 minutes to 4 hours per building. Evaluation shall determine necessary restrictions on a damaged building's use, the need for an engineering evaluation or to evaluate postings.

AR103.2.3 Engineering evaluation. When indicated by the building official as necessary, engineering evaluations shall be completed by a registered design professional hired by the building owner.

AR103.3 Post disaster building safety evaluation Chart. See Figure AR103.3 for Post Disaster Building Safety Evaluation Chart.

AR103.4 Evaluation forms. *ATC-45 Rapid Evaluation Safety Assessment Form* and *ATC-45 Detailed Evaluation Safety Assessment Form* shall be used by **[NAME OF JURISDICTION]'s** Building Official for post disaster inspections. See Section AR605 for copies of the Safety Assessment Forms.

AR103.5 Placement and removal of placards.

AR103.5.1 Placement. Placards are to be posted in a clearly visible location near the main entrance and shall be visible from the public right-of-way. In addition RESTRICTED USE or UNSAFE placards shall be placed at all entrances.

AR103.5.2 Removal. Placards shall not be removed or replaced, except by the authorized representatives of the local jurisdiction.

PROPOSED

Figure AR103.3 Post Disaster Building Safety Evaluation Chart [a]

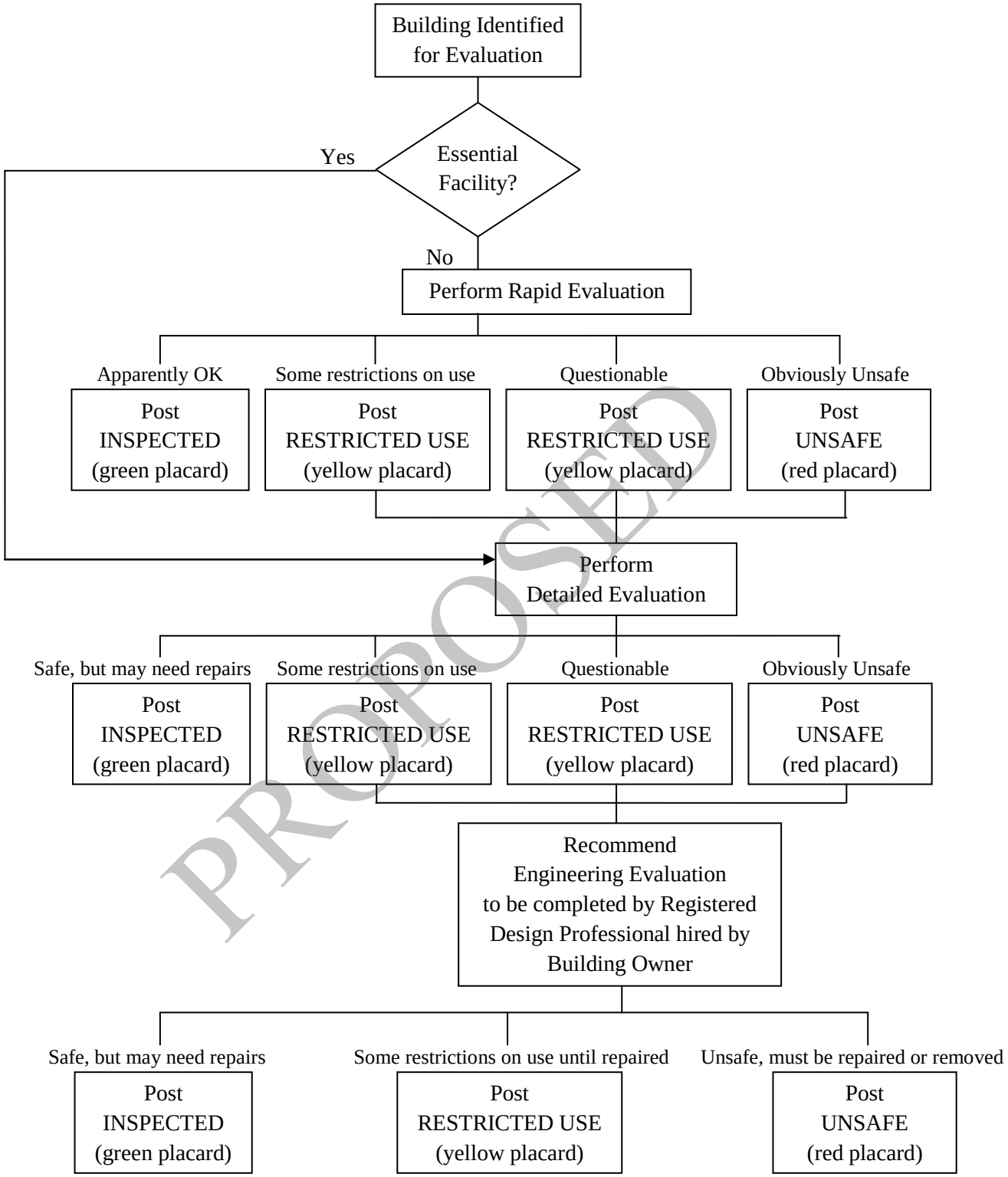

PROPOSED

[a] *When Disaster Strikes* by the International Code Council, Inc., Seventh Printing: November 2011, copyright 2007

CHAPTER AR2
DEFINITIONS

SECTION AR201
GENERAL

AR201.1 Scope. Unless otherwise expressly stated the following words and terms shall, for the purposes of this appendix, have the meanings shown in this chapter.

AR201.2 Terms defined in other codes. Where terms are not defined in this appendix and are defined in other *International Codes*, such terms shall have the meanings ascribed to them as in those codes.

AR201.3 Terms not defined. Where terms are not defined through the methods authorized by this section, such terms shall have their ordinarily accepted meanings such as the context implies.

SECTION AR202
DEFINITIONS

500-YEAR FLOOD. Flood having a 0.2% annual probability of being equaled or exceeded.

ADVISORY BASE FLOOD ELEVATION (ABFE). An advisory base flood elevation (BFE) issued by the Federal Emergency Management Agency (FEMA) that reflects post-storm conditions and vulnerability to damages from future flooding.

BASE FLOOD. Flood having a 1% chance of being equaled or exceeded in any given year, also referred to as the 100-year flood.

BASE FLOOD ELEVATION (BFE). The elevation of flooding, including wave height, having a 1% chance of being equaled or exceeded in any given year established relative to the National Geodetic Vertical Datum (NGVD), North American Vertical Datum (NAVD) or other datum specified on the *Flood Insurance Rate Map* (FIRM).

BUILDING OFFICIAL. The officer or other designated authority charged with the administration and enforcement of the *International Residential Code*, or the building official's duly authorized representative.

DESIGN FLOOD. The greater of the following two flood events:

(1) The *base flood*, affecting those areas identified as *special flood hazard areas* on the community's FIRM;

(2) The flood corresponding to the area designated as a *flood hazard area* on a community's *flood hazard map* or otherwise legally designated.

DESIGN FLOOD ELEVATION (DFE). The elevation of the *design flood*, including wave height, relative to the datum specified on the community's legally designated flood hazard map. In areas designated as Zone AO, the *design flood elevation* shall be the elevation of the highest existing grade of the building's perimeter plus the depth number (in feet) specified on the flood hazard map.

FLOOD [DAMAGE]-RESISTANT MATERIAL. Any building product [material, component or system] capable of withstanding direct and prolonged contact with floodwaters without sustaining significant damage.

FLOOD HAZARD AREA. The area subject to flooding during the *design flood*.

FLOOD HAZARD MAP. Map delineating *flood hazard areas* adopted by the authority having jurisdiction.

FLOOD INSURANCE RATE MAP (FIRM). An official map of a community on which the Federal Emergency Management Agency (FEMA) has delineated both the *special flood hazard areas* and the risk premium zones applicable to the community.

FREEBOARD. A factor of safety expressed in feet above a flood level for purposes of floodplain management.

FUTURE-CONDITIONS FLOOD. The flood having a 1% chance of being equaled or exceeded in any given year based on future-conditions hydrology. Also known as the 100-year future-conditions flood.

FUTURE-CONDITIONS FLOOD ELEVATION. The flood standard equal to or higher than the Base Flood Elevation. The future-conditions flood elevation is defined as the highest water surface anticipated at any given point during the future-conditions flood.

PROPOSED

CHAPTER AR3
FLOOD-RESISTANT CONSTRUCTION

Forward: This appendix provides three different options for increased freeboard. The jurisdiction may pick only one option that is higher than previously adopted and enforced by the jurisdiction. The National Flood Insurance Program (NFIP) minimum standards reference Base Flood Elevation without any freeboard in high risk flood hazard areas. Due to the flood damage prevention updates performed during the Map Modernization initiative that led to flood risks being digitally identified in all 159 Georgia counties, all Georgia NFIP participating communities have freeboard standards that meet or exceed the 1 foot standard used in the State model ordinances for areas where BFEs have been established.

SECTION AR301
HAZARD IDENTIFICATION

AR301.1 Identification of flood hazard areas. To establish flood hazard areas:

(a) flood hazard map adopted by jurisdiction based on areas of special flood hazard as identified by the Federal Emergency Management Agency in an engineering report entitled "The Flood Insurance Study of **[INSERT NAME OF JURISDICTION]**," dated **[INSERT DATE ISSUANCE]**, and amended or revised with the accompanying Flood Insurance Rate Map (FIRM) and Flood Boundary and Floodway Map (FBFM) and related supporting data along with any revisions thereto.

(b) FIRM maps provided by the Federal Emergency Management Agency.

SECTION AR302
SCOPE

AR302.1 Flood loads. Buildings designed and constructed in flood hazard areas defined in Table R301.2(1) of the *International Residential Code* shall comply with the following:

AR302.1.1 Flood hazard areas without base flood elevations. In flood hazard areas without base flood or future-conditions flood elevation data, new construction and substantial improvements of existing structures shall have the lowest floor of the lowest enclosed area (including basement) elevated no less than three (3) feet above the highest adjacent grade to the building foundation.

OPTION A – FLOOD ELEVATION

AR302.1.2 Increase to base flood elevation requirements. Floors required by ASCE 24 to be built above base flood elevations as follows:

The higher of:

(a) Design flood elevation plus one (1) foot, or
(b) Base flood elevation plus one (1) foot, or
(c) Advisory base flood elevation, or
(d) Future-conditions plus one (1) foot, if known or
(e) 500-year flood, if known

OPTION B– FLOOD ELEVATION

AR302.1.3 Increase to base flood elevation requirements. Floors required by ASCE 24 to be built above base flood elevations as follows:

The higher of:

(a) Design flood elevation plus two (2) feet, or
(b) Base flood elevation plus two (2) feet, or
(c) Advisory base flood elevation, or
(d) Future-conditions plus one (1) foot, if known or
(e) 500-year flood, if known

OPTION C – FLOOD ELEVATION

AR302.1.4 Increase to base flood elevation requirements. Floors required by ASCE 24 to be built above base flood elevations as follows:

The higher of:

(a) Design flood elevation plus three (3) feet, or
(b) Base flood elevation plus three (3) feet, or
(c) Advisory base flood elevation, or
(d) Future-conditions plus one (1) foot, if known or
(e) 500-year flood, if known

SECTION AR303
FLOOD DAMAGE-RESISTANT MATERIALS

AR303.1 Flood damage-resistant materials. Flood damage-resistant materials comply with FEMA Technical Bulletin 2, Table 2. Types, Uses, and Classifications of Materials.

AR303.2 Location of flood damage-resistant materials. Building components and materials located below the increase to base flood elevation as determined by the local jurisdiction in accordance with AR302.1 shall be flood damage-resistant as defined by Section AR303.1.

AR303.3 Fasteners and connectors used for flood damage-resistant materials. Fasteners and connectors used for flood damage-resistant materials to be made of stainless steel, hot-dipped zinc-coated galvanized steel, mechanically deposited-zinc coated, silicon bronze or copper. Copper fasteners shall not be permitted for use in conjunction with steel.

PROPOSED

CHAPTER AR4
HIGH-WIND RESISTIVE CONSTRUCTION

Forward: This appendix provides four different options for increased wind speed. The jurisdiction may pick only one option that is higher than the mapped wind speed shown in the International Residential Code.

SECTION AR401
GENERAL

AR401.1 Scope. The provisions of this appendix shall govern the structural design of one- and two-family dwellings (townhouses) not more than three stories in height with separate means of egress and their accessory structures. The building or structure shall comply with all aspects of the International Residential Code in addition to the requirements of this appendix.

AR401.2 Continuous load path. A continuous load path shall be provided to transmit the applicable forces from the roof assembly to the foundation.

AR401.3 Adoption of wind speed. [INSERT NAME OF JURISDICTION] adopts Option **[PICK A, B, C, or D]** MINIMUM WIND SPEED **[INSERT WIND SPEED]**.

AR401.4 Alternative materials, design and methods of construction and equipment. The provisions of this appendix are not intended to prevent the installation of any material or to prohibit any design or method of construction not specifically prescribed by this appendix, provided such material is listed and tested for such application intended. An alternative material, design or method of construction shall be *approved* where the *building official* finds that the proposed design is satisfactory and complies with the intent of the provisions of this appendix, and that the material, method or work offered is, for the purpose intended, at least the equivalent of that prescribed in this appendix. Compliance with the specific performance-based provisions of the International Codes in lieu of specific requirements of this appendix shall also be permitted as an alternate.

AR401.4.1 Tests. Whenever there is insufficient evidence of compliance with the provisions of this appendix, or evidence that a material or method does not conform to the requirements of this appendix, or in order to substantiate claims for alternative materials or methods, the *building official* shall have the authority to require tests as evidence of compliance to be made at no expense to the *jurisdiction*. Test methods shall be as specified in this appendix or by other recognized test standards. In the absence of recognized and accepted test methods, the *building official* shall approve the testing procedures. Tests shall be performed by an *approved* agency. Reports of such tests shall be retained by the *building official* for the period required for retention of public records.

SECTION AR402
OPTION A – MINIMUM WIND SPEED 100 MPH

AR402.1 Wind speed. *Buildings* shall be designed and constructed to comply with minimum wind speed of 100 mph Exposure B in accordance with AR402.1.1 or in accordance with Prescriptive Method AR402.2. Buildings with minimum wind speed of 100 mph Exposure C shall be in accordance with AR402.1.1.

AR402.1.1 Design methods. The design of buildings for wind loads shall be in accordance with one or more of the following methods:

1. *AF&PA Wood Frame Construction Manual (WFCM)*, or
2. AF&PA *Wood Frame Construction Manual* Guide to Wood Construction in High Wind Areas for One- and Two-Family Dwellings: 100 MPH Exposure B (WFCM); or
3. ICC *Standard for Residential Construction in High-Wind Regions* (ICC 600); or
4. ASCE *Minimum Design Loads for Buildings and Other Structures* (ASCE 7); or
5. AISI *Standard for Cold-Formed Steel Framing – Prescriptive Method For One- and Two-Family Dwellings* (AISI S230); or
6. *International Building Code*; or
7. *Concrete walls in accordance with R404 and R611of the International Residential Code*; or
8. *Walls of structural insulated panels in accordance with R613 of the International Residential Code*.

AR402.2 Prescriptive wood frame construction method deemed to comply with 100 MPH Exposure B. Prescriptive construction method for wood frame structures shall be in accordance with IRC requirements for 100 mph Exposure B construction as modified in this section. A continuous load path shall be provided to transmit uplift forces from the roof assembly to the ground as follows:

PROPOSED

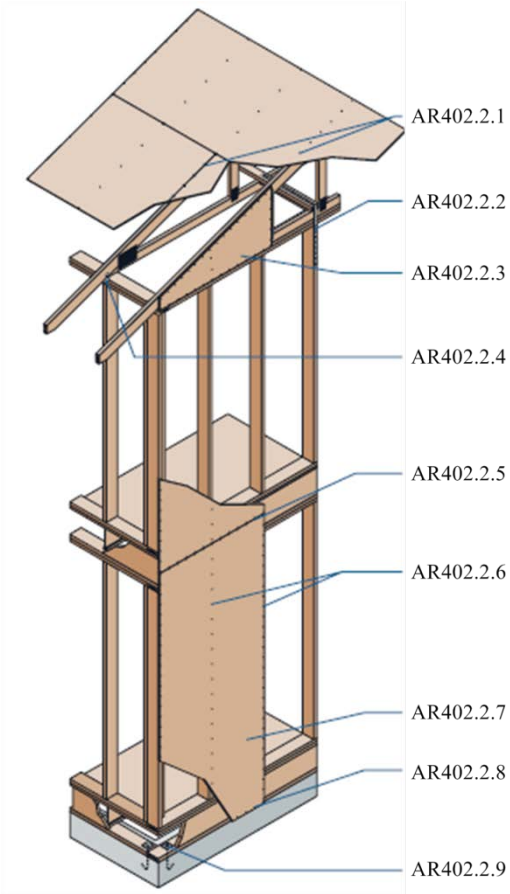

Figure AR402.2[b]

(b) Form No. M310B © 2011 APA – The Engineered Wood Association.

AR402.2.1 Roof sheathing attachment. Nail roof sheathing with 8d ring shank (or deformed shank) (0.131" x 2-1/2") nails at 4 inches on center along the ends of the sheathing and gable end framing 6 inches on center along intermediate framing. See Figure AR402.2.1.

AR402.2.2 Gable end wall connection. Tie gable end walls back to the structure. See Figure AR402.2.2.

AR402.2.3 Gable end wall sheathing. Continuously sheath gable end walls with wood structural panels or equivalent approved material meeting loading requirements. See Figure AR402.2.3.

AR402.2.4 Roof framing to wall connection. Connect roof framing to wall using an approved connector or connectors having allowable loads when attached to Southern Pine or Douglas Fir lumber of 585 pounds in the upward direction, 485 pounds in the direction parallel to the wall and 165 pounds in the direction perpendicular to the wall. Attachment to be on exterior face of the exterior walls. See Figure AR402.2.4.

AR402.2.5 Sheathing attachment at elevated floor level. Nail upper story sheathing and lower story sheathing into common wood structural panel or engineered rim board. See Figure AR402.2.5.

AR402.2.6 Wall sheathing attachment. Attach wall sheathing with 8d common (0.131" x 2-1/2") nails at 4 inches on center at end and edges of wood structural panels and 6 inches on center in the intermediate framing. See Figure AR402.2.6a. Adjacent edges in wood structural panel wall sheathing that do not occur over common framing members shall be attached to flat wise blocking as illustrated in Figure AR402.2.6b.

AR402.2.7 Continuous wall sheathing. Continuously sheath all walls with wood structural panels or equivalent approved material meeting loading requirements. Continuously sheath areas around openings for windows and doors. Minimum wall bracing requirements shall be in accordance with IRC Section R602.10 or R602.12 continuous sheathing methods as modified in Section AR402.2.

AR402.2.8 Wall sheathing to sill plate connection. Extend sheathing material to lap the sill plate. See Figure AR402.2.8.

AR402.2.9 Anchor bolt connection. Space ½" anchor bolts with 7 inches of embedment 48 inches on center with 0.229" x 3" x 3" square plate washers with slotted holes. See Figure AR402.2.9. There shall be a minimum of 2 bolts per plate section with one bolt located not more than 12" or less than 3.5" from each end of the plate section.

AR402.2.10 Top plate intersection detail. Double top plates shall be provided at the top of all exterior stud walls. The double plates shall overlap at corners and at intersections with other exterior or interior load bearing walls. Double top plates shall be lap-spliced with end joints offset in accordance with the minimum requirements given in the *WFCM Guides to Wood Construction in High Wind Areas for One- and Two-Family Dwellings: 100 MPH Exposure B.* See Figure AR402.2.10.

AR402.3 Wall openings. Uplift load path connections at wall openings shall be in accordance with IRC Section R602.3.5.

PROPOSED

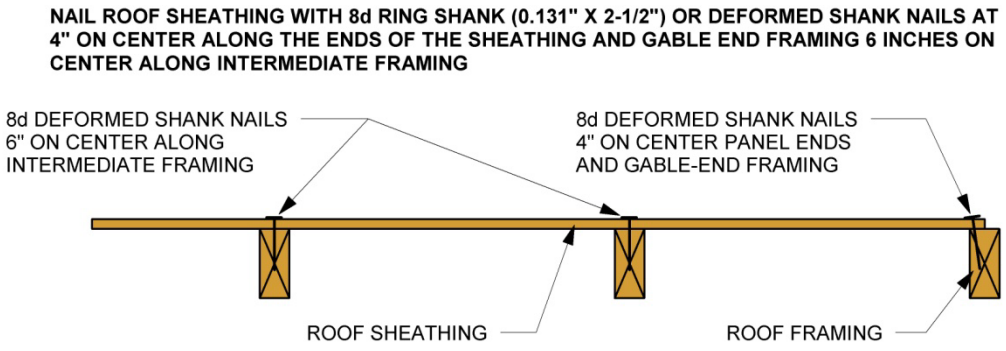

Figure AR402.2.1[b]
Roof Sheathing Attachment Detail

PROPOSED

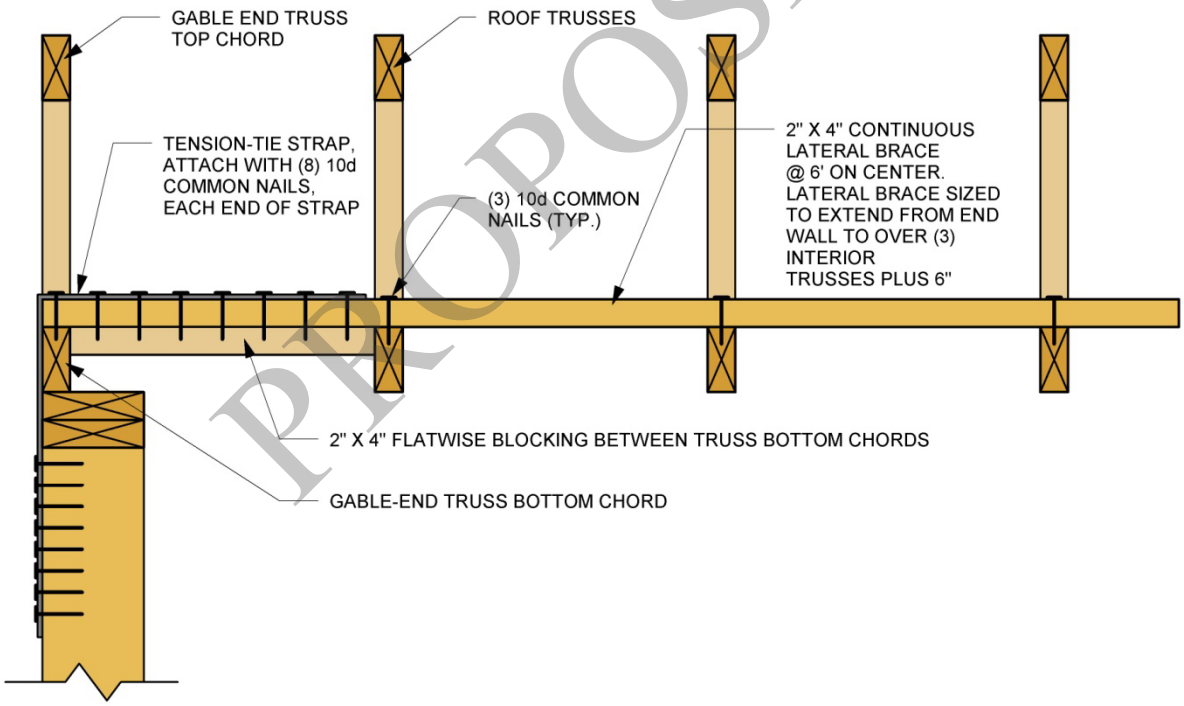

Figure AR402.2.2[b]
Gable End Wall Connection Detail

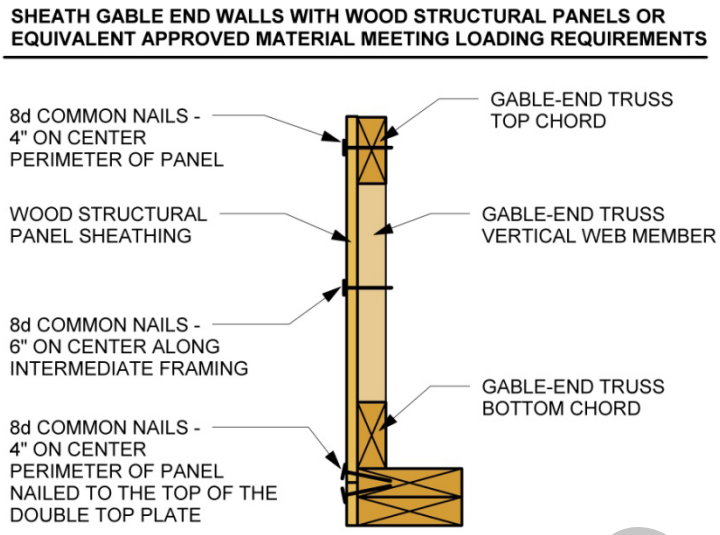

Figure AR402.2.3[b]
Gable End Wall Sheathing Detail

PROPOSED

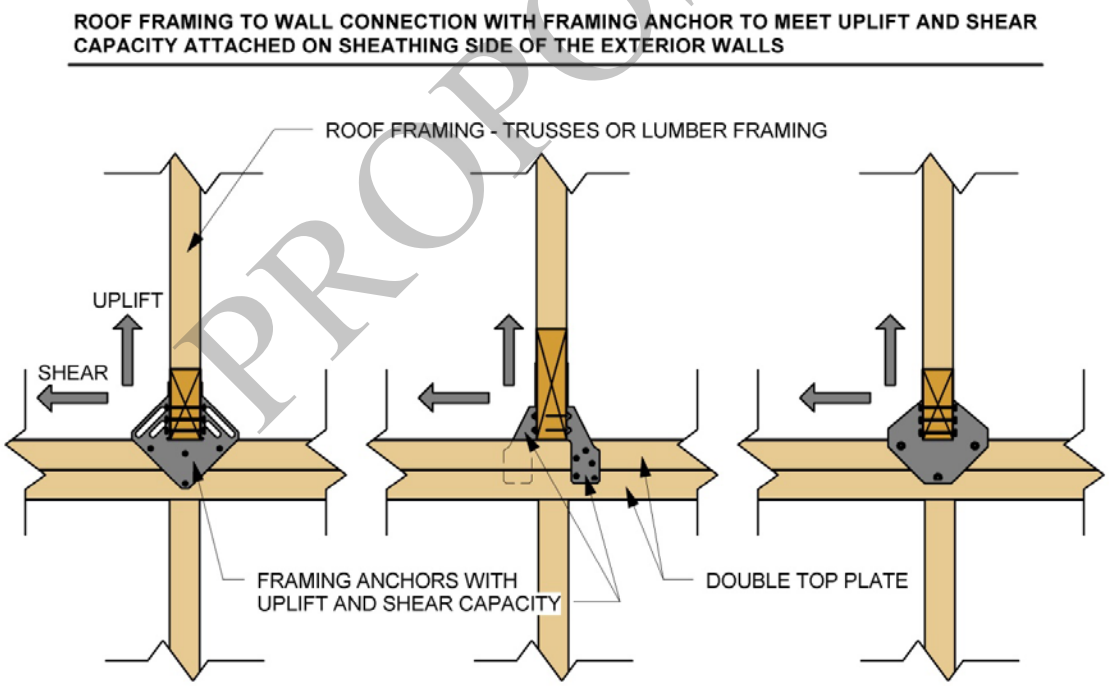

Figure AR402.2.4[b]
Roof Framing to Wall Connection Detail

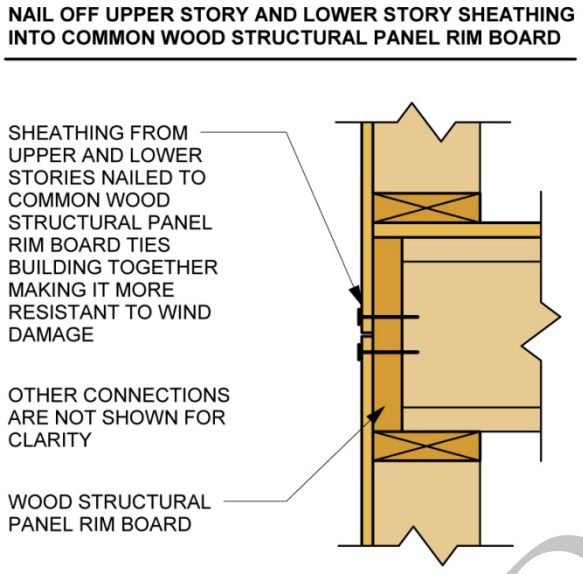

Figure AR402.2.5[b]
Sheathing Attachment at Elevated Floor Level Detail

PROPOSED

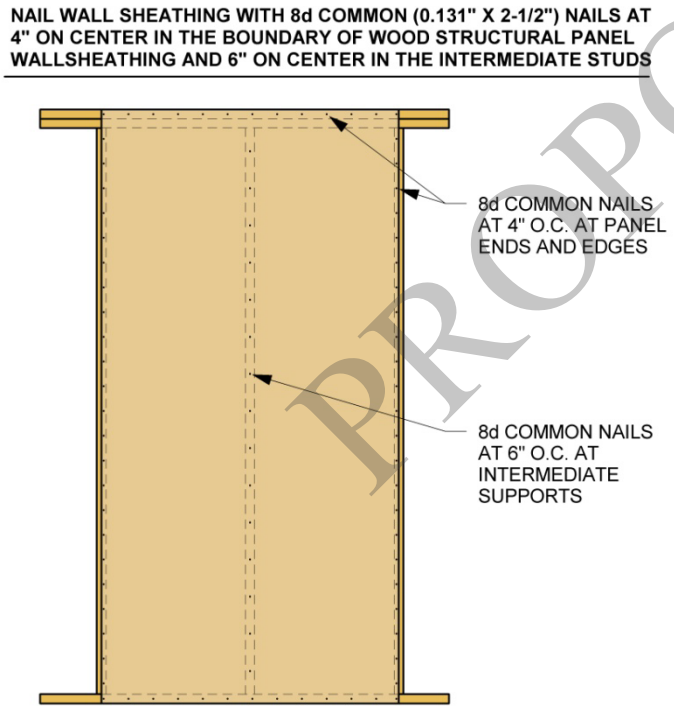

Figure AR402.2.6a[b]
Wall Sheathing Attachment Detail

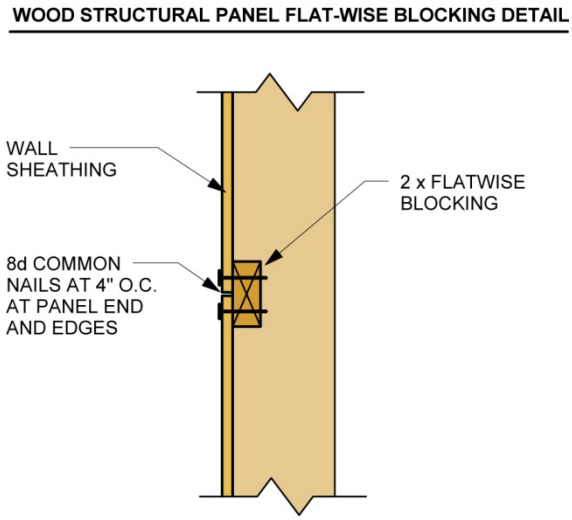

Figure AR402.2.6b
Panel Splice Detail

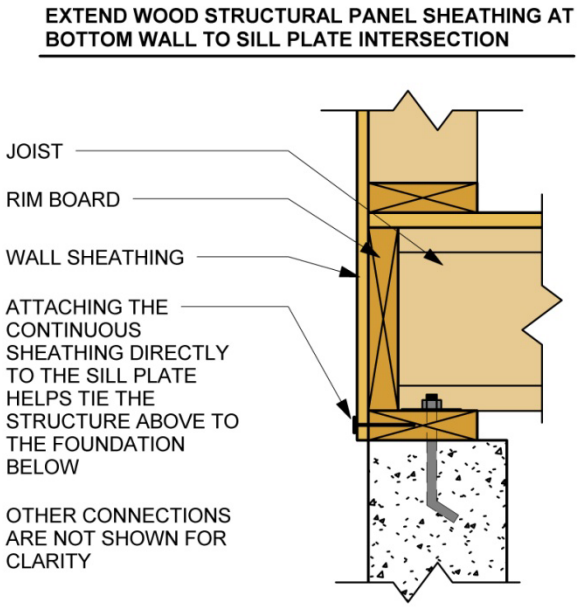

Figure AR402.2.8[b]
Wall Sheathing to Sill Plate Connection Detail

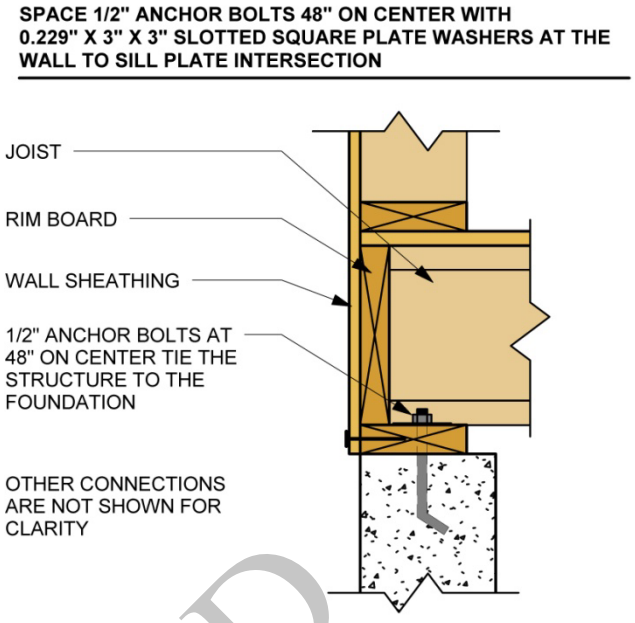

Figure AR402.2.9[b]
Anchor Bolt Connection Detail

PROPOSED

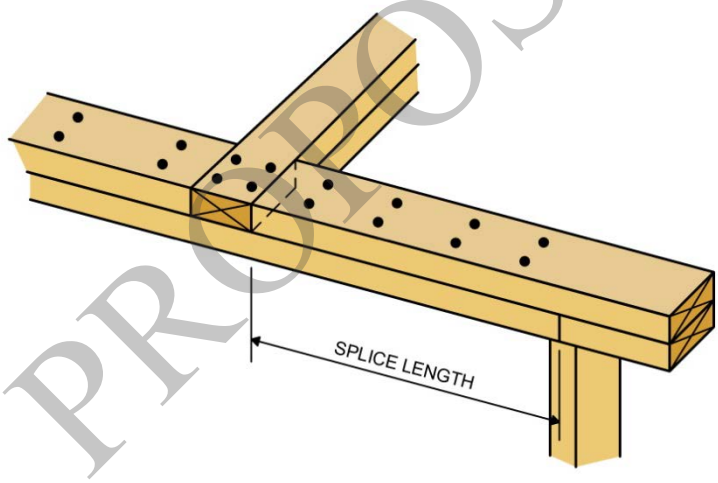

Figure AR402.2.10[c]
Top Plate Intersection Detail

(b) ***Form No. M310B*** **August 2011 APA – The Engineered Wood Association**

(c) ***WFCM Guide to Wood Construction in High Wind Areas for One- and Two-Family*** **Dwellings – American Forest & Paper Association and the American Wood Council**

SECTION AR403
OPTION B –MINIMUM WIND SPEED 110 MPH

AR403.1 Wind speed. *Buildings* shall be designed and constructed to comply with minimum wind speed of 110 mph Exposure B.

AR403.1.1 Design methods. The design of buildings for wind loads shall be in accordance with one or more of the following methods:

1. AF&PA *Wood Frame Construction Manual* (WFCM); or
2. ICC *Standard for Residential Construction in High-Wind Regions* (ICC 600); or
3. ASCE *Minimum Design Loads for Buildings and Other Structures* (ASCE 7); or
4. AISI *Standard for Cold-Formed Steel Framing – Prescriptive Method For One- and Two-Family Dwellings* (AISI S230); or
5. *International Building Code*; or
6. *Concrete walls in accordance with R404 and R611of the International Residential Code*; or
7. *Walls of structural insulated panels in accordance with R613 of the International Residential Code*.

SECTION AR404
OPTION C –MINIMUM WIND SPEED 120 MPH

AR404.1 Wind speed. *Buildings* shall be designed and constructed to comply with minimum wind speed of 120 mph Exposure B.

AR404.1.1 Design methods. The design of buildings for wind loads shall be in accordance with one or more of the following methods:

1. AF&PA *Wood Frame Construction Manual* (WFCM); or
2. ICC *Standard for Residential Construction in High-Wind Regions* (ICC 600); or
3. ASCE *Minimum Design Loads for Buildings and Other Structures* (ASCE 7); or
4. AISI *Standard for Cold-Formed Steel Framing – Prescriptive Method For One- and Two-Family Dwellings* (AISI S230); or
5. *International Building Code; or*
6. *Concrete walls in accordance with R404 and R611of the International Residential Code; or*
7. *Walls of structural insulated panels in accordance with R613 of the International Residential Code*.

SECTION AR405
OPTION D – MINIMUM WIND SPEED 130 MPH

AR405.1 Wind speed. *Buildings* shall be designed and constructed to comply with minimum wind speed of 130 mph Exposure B.

AR405.1.1 Design methods. The design of buildings for wind loads shall be in accordance with one or more of the following methods:

1. AF&PA *Wood Frame Construction Manual* (WFCM); or
2. ICC *Standard for Residential Construction in High-Wind Regions* (ICC 600); or
3. ASCE *Minimum Design Loads for Buildings and Other Structures* (ASCE 7); or
4. AISI *Standard for Cold-Formed Steel Framing – Prescriptive Method For One- and Two-Family Dwellings* (AISI S230); or
5. *International Building Code; or*.
6. *Concrete walls in accordance with R404 and R611of the International Residential Code*.

SECTION AR406
FASTENERS AND CONNECTORS FOR CLADDING

AR406.1 Fasteners and connectors for cladding. Fasteners and connectors to be made of stainless steel, hot-dipped zinc-coated galvanized steel, mechanically deposited-zinc coated, silicon bronze or copper. Copper fasteners shall not be permitted for use in conjunction with steel.

SECTION AR407
FENESTRATION

AR407.1 Design pressure. Exterior windows and doors shall be designed to resist the design wind loads specified in *International Residential Code* Table R301.2(2) adjusted for height and exposure per *International Residential Code* Table R301.2(3) based on the minimum wind speed specified in this appendix by the local jurisdiction.

AR407.2 Anchorage methods. Window and door assembly anchoring systems shall be in accordance with the manufacturer's published recommendations to achieve the design pressure specified per Section AR407.1. Substitute anchoring systems shall provide equal or greater anchoring performance as demonstrated by accepted engineering practice. Anchorage shall not exceed the spacing for the tested rated performance.

PROPOSED

SECTION AR408
ROOFING

AR408.1 Secondary water barrier. Underlayment shall be two layers applied in the following manner:

(a) Self-adhering tape as first layer. Install minimum 4 inch wide self-adhering modified bitumen tape over sheathing joints. Seal deck penetrations with self-adhering modified bitumen tape. **ASTM D 226 Type I, ASTM D 4869 Type I or ASTM D 6757** as second layer. Apply a 19-inch strip of underlayment felt parallel to and starting at eaves, secure with low-profile, capped-head nails or thin metal disks attached with roofing nails. Fasten at approximately 6 inches on center along the laps and at approximately 12 inches on center along a row in the field of the sheet between the side laps. All laps shall be a minimum of 4 inches. Starting at the eave, apply 36-inch-wide sheets of underlayment, overlapping successive sheets 19 inches, fasten as before. Distortions in the underlayment shall not interfere with the ability of the shingles to seal.

(b) Two layers of ASTM D 226 Type I, ASTM D 4869 Type I or ASTM D 6757. For each layer, apply a 19-inch strip of underlayment felt parallel to and starting at eaves, secure with low-profile, capped-head nails or thin metal disks attached with roofing nails. Fasten at approximately 6 inches on center along the laps and at approximately 12 inches on center along a row in the field of the sheet between the side laps. All laps shall be a minimum of 4 inches. Starting at the eave, apply 36-inch-wide sheets of underlayment, overlapping successive sheets 19 inches, fasten as before. Distortions in the underlayment shall not interfere with the ability of the shingles to seal.

Exception: As an alternative, adhered underlayment complying with ASTM D 1970 shall be permitted.

AR408.2 Fasteners.

AR408.2.1 Underlayment fasteners. Underlayment shall be attached using metal or plastic cap corrosion-resistant nails with a head diameter of not less than 1 inch with a thickness of at least 32-gauge sheet metal. The cap-nail shank shall be a minimum of 12 gauge with a sufficient length to penetrate through the roof sheathing or a minimum of ¾ inch into the roof sheathing.

AR408.2.2 Asphalt shingles fasteners. Where asphalt shingles shall be applied with corrosion-resistant nails with shanks made of minimum 12 gauge wire and a minimum head diameter of 3/8 inch. Nails shall be long enough to penetrate ¾ inch into the roof deck. Where the deck is less than 3/4 inch thick, the nails shall be long enough to penetrate completely through plywood decking and extend at least 1/8 inch through the roof deck.

AR408.3 Attachment. Where asphalt shingles shall have a minimum number of fasteners required by the manufacturer, but not less than six fasteners per strip shingle or three fasteners per individual shingle. Drive nail head flush with the shingle surface per figure AR408.2.

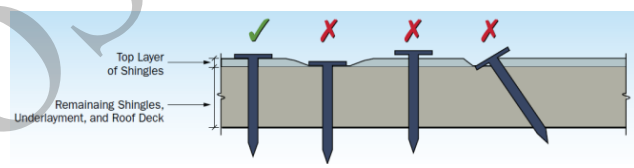

Figure AR408.2[d]

(d) FEMA *Home Builder's Guide to Coastal Construction Technical Fact Sheet No. 7.3 Asphalt Shingle Roofing for High Wind Regions.*

PROPOSED

CHAPTER AR5
RESIDENTIAL STORM SHELTERS AND SAFE ROOMS

SECTION AR501
GENERAL

AR501.1 General. This section applies to the construction of residential storm shelters and safe rooms when constructed as separate detached buildings or as internal areas within buildings for the purpose of providing safe refuge for storms that produce high winds, such as tornados and hurricanes. Residential storm shelters or safe rooms shall be offered as an optional package.

SECTION AR502
RESIDENTIAL STORM SHELTERS AND SAFE ROOMS

AR502.1 Residential storm shelters. Residential storm shelters when constructed shall be in compliance with the following:

1. *ICC/NSSA-500* per IRC Section R323.

AR502.2 Residential safe rooms. Residential safe rooms when constructed shall be in compliance with the following:

1. *FEMA 361 Design and Construction Guidance for Community Safe Rooms;* or
2. *FEMA 320 Taking Shelter from the Storm: Building a Safe Room For Your Home and Small Business*

PROPOSED

CHAPTER AR6
RESOURCES

SECTION AR601
CONTACTS

Georgia Department of Community Affairs (DCA)
Construction Codes
Georgia State Amendments to the State Minimum Standard Codes
http://www.dca.ga.gov/development/constructioncodes/programs/codeAmendments.asp
Phone: 404-679-3118

Georgia Department of Natural Resources (DNR)
Floodplain Management
4220 International Parkway, Ste. 101
Atlanta, GA 30354-3902
www.georgiadfirm.com
Phone: 404-675-1757

Federal Emergency Management Agency (FEMA)
www.fema.gov; www.floodsmart.gov
www.fema.gov/rebuild/buildingscience/
FEMA Publications and Technical Bulletins:
www.fema.gov/library/index.jsp
www.fema.gov/plan/prevent/floodplain/techbul.shtm

Georgia Emergency Management Agency (GEMA)
Georgia Office of Homeland Security
P.O. Box 18055
Atlanta, GA 30316-0055
www.gema.ga.gov
www.ready.ga.gov
Phone: 404-635-7000

Georgia Association of Regional Commissions (GARC)
www.garc.ga.gov
http://garc.ga.gov/main.php?Regional-Commissions-2
(for assistance in identifying Flood Hazard Areas)

International Code Council (ICC)
www.iccsafe.org

National Weather Service
www.srh.weather.gov

State Fire Marshal's Office
2 Martin Luther King Jr. Drive
Suite 920 / West Tower
Atlanta, Georgia 30334
www.oci.ga.gov
Phone: 404-656-7087

PROPOSED

SECTION AR602
EMERGENCY INSPECTION KIT [e]

- □ **Staff's disaster response management plan**
- □ **Team contact list**
- □ **Area maps**
- □ **Official identification**
- □ **Personal identification**
- □ **Inspection forms and placards**
- □ **Communication equipment**
- □ **Clipboard**
- □ **Hard hat**
- □ **Orange safety vest**
- □ **Dust mask**
- □ **Work gloves**
- □ **Steel toe and waterproof boots**
- □ **Whistle**
- □ **First aid kit**
- □ **Latex gloves**
- □ **Safety glasses**
- □ **Sunglasses**
- □ **Pocket knife**
- □ **Matches**
- □ **Antibacterial hand wipes or alcohol-based hand sanitizer**
- □ **Insect repellant (w/ Deet or Picaridin)**
- □ **Sunscreen (SPF 15 or greater)**
- □ **Camera**
- □ **Black markers**
- □ **Pens & pencils**
- □ **Envelope for expense receipts**
- □ **Compass, GPS unit**
- □ **Backpack, waistpack**
- □ **Flashlight and extra batteries**
- □ **Battery-operated radio**
- □ **Duct tape**
- □ **Staples & stapler**
- □ **Staple gun**
- □ **Calculator**
- □ **Tire repair kit**

Remember to grab:

- □ **Personal identification**
- □ **Rain gear, extra clothing**
- □ **Water bottle**
- □ **Prescription medication**
- □ **Cell phone and charger**
- □ **Cash for personal expenses**
- □ **Toiletries**

(e) *Disaster Mitigation: A Guide for Building Departments* by the International Code Council, Inc., copyright 2009

SECTION AR603
SAFETY TIPS [a]

1. **Always travel in teams of at least two people.**
2. **Always wear a hard hat, gloves, goggles, safety vest, and dust masks.**
3. **Always wear safety shoes capable of protecting the toes and bottom of the foot.**
4. **Survey the building exterior completely before entering.**
5. **Enter building only if authorized and if deemed safe to do so.**
6. **Be alert for falling objects.**
7. **In case of fire, injuries or victims, evacuate the area and alert the fire department immediately.**
8. **Avoid downed power lines and buildings under them or water surrounding them.**
9. **In case of gas leaks, shut off the gas (if possible) and report the leak.**
10. **In a flood situation, have a "walking stick."**

(a)*When Disaster Strikes* by the International Code Council, Inc., Seventh Printing: November 2011, copyright 2007

SECTION AR604
MAJOR DISASTER PROCESS

(from link http://www.fema.gov/hazard/dproc.shtm)

A Major Disaster Declaration usually follows these steps:

- **Incident occurs and local government responds,** supplemented by neighboring communities and volunteer agencies. If overwhelmed, turn to the state for assistance;

Generally the local government will issue a local state of emergency

- **The State responds** with state resources, such as the National Guard and state agencies;

Prior to committing state resources, the Governor will declare a state of emergency in the counties impacted by the event for which assistance is needed.

- **Damage assessment** by local, state, federal, and volunteer organizations determine losses and recovery needs;

Generally the locals will submit a preliminary damage assessment to the State and the State will review and determine if state and/or federal assistance is needed. If federal assistance is needed, the state will request FEMA perform a preliminary joint damage assessment. If the Governor determines that the incident is of such severity and magnitude that effective response is beyond the capabilities of the State and the affected local governments then supplementary Federal assistance is requested (next step).

- **A Major Disaster Declaration** is requested by the Governor, based on the damage assessment, and agreement to commit state funds and resources to the long-term recovery;
- **FEMA evaluates** the request and recommends action to the White House based on the disaster, the local community and the state's ability to recover;
- **The President approves** the request or FEMA informs the Governor it has been denied. This decision process could take a few hours or several weeks depending on the nature of the disaster.

PROPOSED

SECTION AR605
SAMPLE EVALUATION FORMS AND INSPECTION PLACARDS [e] (following pages)

Figure AR605.1 [e]

ATC-45 Rapid Evaluation Safety Assessment Form

Inspection

Inspector ID: _____ Inspection date: _____

Affiliation: _____ Inspection time: _____ ☐ AM ☐ PM

Areas inspected: ☐ Exterior only ☐ Exterior and interior

Building Description

Building name: _____

Address: _____

Building contact/phone: _____

Number of stories: _____

"Footprint area" (square feet): _____

Number of residential units: _____

Type of Building

☐ Mid-rise or high-rise
☐ Low-rise multi-family
☐ Low-rise commercial
☐ Pre-fabricated
☐ One- or two-family dwelling

Primary Occupancy

☐ Dwelling
☐ Other residential
☐ Public assembly
☐ Emergency services
☐ Commercial
☐ Offices
☐ Industrial
☐ Other: _____
☐ Government
☐ Historic
☐ School

Evaluation

Investigate the building for the conditions below and check the appropriate column.

Observed Conditions:	Minor/None	Moderate	Severe
Collapse, partial collapse, or building off foundation	☐	☐	☐
Building significantly out of plumb or in danger	☐	☐	☐
Damage to primary structural members, racking of walls	☐	☐	☐
Falling hazard due to nonstructural damage	☐	☐	☐
Geotechnical hazard, scour, erosion, slope failure, etc.	☐	☐	☐
Electrical lines / fixtures submerged / leaning trees	☐	☐	☐
Other (specify) _____	☐	☐	☐

Estimated Building Damage (excluding contents)

☐ None
☐ >0 to <1%
☐ 1 to <10%
☐ 10 to <30%
☐ 30 to <70%
☐ 70 to <100%
☐ 100%

☐ See back of form for further comments.

Posting

Choose a posting based on the evaluation and team judgment. Severe conditions endangering the overall building are grounds for an Unsafe posting. Localized Severe and overall Moderate conditions may allow a Restricted Use posting.

☐ **INSPECTED** (Green placard) ☐ **RESTRICTED USE** (Yellow placard) ☐ **UNSAFE** (Red placard)

Record any use and entry restrictions exactly as written on placard: _____

Number of residential units vacated: _____

Further Actions

Check the boxes below only if further actions are needed.

☐ Barricades needed in the following areas: _____

☐ Detailed Evaluation recommended: ☐ Structural ☐ Geotechnical ☐ Other: _____

☐ Substantial Damage determination recommended

☐ Other recommendations: _____

☐ See back of form for further comments.

© Copyright 2004-07, Applied Technology Council.
Permission is granted for unlimited, non-exclusive, non-commercial use and distribution of ATC evaluation forms, provided that this Copyright Notice appears on all copies and the Applied Technology Council name shall not be used in any advertising or publicity of Licensee product. Permission is further subject to the following conditions: (1) Licensee does not reprint, repackage or offer this form for sale or license; and (2) no material gain or financial profit is to be made from any sale or license of this form. Placards may be used without restrictions for their intended use as building postings. All rights not specifically granted to Licensee are herein reserved by ATC.

PROPOSED

Figure AR605.2 [e]

ATC-45 Detailed Evaluation Safety Assessment Form

Inspection

Inspector ID: _____ Inspection date: _____

Affiliation: _____ Inspection time: _____ ☐ AM ☐ PM

Final Posting
from page 2

☐ Inspected
☐ Restricted Use
☐ Unsafe

Building Description

Building name: _____

Address: _____

_____

Building contact/phone: _____

Number of stories: _____

"Footprint area" (square feet): _____

Number of residential units: _____

Type of Building

☐ Mid-rise or High-rise
☐ Low-rise multi-family
☐ Low-rise commercial
☐ Pre-fabricated
☐ One- or two-family dwelling
☐ Other: _____

Primary Occupancy

☐ Dwelling
☐ Other residential
☐ Public assembly
☐ Emergency services
☐ Commercial
☐ Offices
☐ Industrial
☐ Other: _____
☐ Government
☐ Historic
☐ School

Evaluation

Investigate the building for the conditions below and check the appropriate column. There is room on the second page for a sketch.

	Minor/None	Moderate	Severe	Comments
Overall hazards:				
Collapse or partial collapse	☐	☐	☐	_____
Building or story lean or drift	☐	☐	☐	_____
Fractured or displaced foundation	☐	☐	☐	_____
Structural hazards:				
Failure of significant element/connection	☐	☐	☐	_____
Column, pier, or bearing wall	☐	☐	☐	_____
Roof/floor framing or connection	☐	☐	☐	_____
Superstructure/foundation connection	☐	☐	☐	_____
Moment frame	☐	☐	☐	_____
Diaphragm/horizontal bracing	☐	☐	☐	_____
Vertical bracing	☐	☐	☐	_____
Shear wall	☐	☐	☐	_____
Nonstructural hazards:				
Parapets, ornamentation	☐	☐	☐	_____
Canopy	☐	☐	☐	_____
Cladding, glazing	☐	☐	☐	_____
Ceilings, light fixtures	☐	☐	☐	_____
Stairs, exits, access walkways, gratings	☐	☐	☐	_____
Interior walls, partitions	☐	☐	☐	_____
Mechanical & electrical equipment	☐	☐	☐	_____
Elevators	☐	☐	☐	_____
Building contents, other _____	☐	☐	☐	_____
Geotechnical hazards:				
Slope failure, debris impact	☐	☐	☐	_____
Ground movement, erosion, sedimentation	☐	☐	☐	_____
Differential settlement	☐	☐	☐	_____

Continue on page 2

PROPOSED

Figure AR605.2 [e] (Continued)

ATC-45 Detailed Evaluation Safety Assessment Form — Page 2

Building name: _____ Inspector ID: _____

Sketch
Make a sketch of the damaged building in the space provided. Indicate damage points.

Estimated Building Damage
(excluding contents)

- ☐ None
- ☐ >0 to <1%
- ☐ 1 to <10%
- ☐ 10 to <30%
- ☐ 30 to <70%
- ☐ 70 to <100%
- ☐ 100%

Posting
If there is an existing posting from a previous evaluation, check the appropriate box.

Previous posting: ☐ INSPECTED ☐ RESTRICTED USE ☐ UNSAFE Inspector ID: _____ Date: _____

If necessary, revise the posting based on the new evaluation and team judgment. *Severe* conditions endangering the overall building are grounds for an Unsafe posting. Local *Severe* and overall *Moderate* conditions may allow a Restricted Use posting. Indicate the current posting below and at the top of page one, whether the posting has been revised or not.

☐ **INSPECTED** (Green placard) ☐ **RESTRICTED USE** (Yellow placard) ☐ **UNSAFE** (Red placard)

Record any use and entry restrictions exactly as written on placard: _____

Number of residential units vacated: _____

Further Actions Check the boxes below only if further actions are needed.

☐ Barricades needed in the following areas: _____

☐ Engineering Evaluation recommended: ☐ Structural ☐ Geotechnical ☐ Other _____

☐ Substantial Damage determination recommended

☐ Other recommendations: _____

© Copyright 2004-07, Applied Technology Council.
Permission is granted for unlimited, non-exclusive, non-commercial use and distribution of ATC evaluation forms, provided that this Copyright Notice appears on all copies and the Applied Technology Council name shall not be used in any advertising or publicity of Licensee product. Permission is further subject to the following conditions: (1) Licensee does not reprint, repackage or offer this form for sale or license; and (2) no material gain or financial profit is to be made from any sale or license of this form. Placards may be used without restrictions for their intended use as building postings. All rights not specifically granted to Licensee are herein reserved by ATC.

PROPOSED

Figure AR605.3 [e]

INSPECTED

LAWFUL OCCUPANCY PERMITTED

This structure has been inspected (as indicated below) and no apparent structural hazard has been found.

Date _____

Time _____

☐ **Inspected Exterior Only**

☐ **Inspected Exterior and Interior**

Report any unsafe condition to local authorities; reinspection may be required.

Inspector Comments:

_____

_____

_____

Facility Name and Address:

_____

_____

_____

This facility was inspected under emergency conditions for:

_____ (Jurisdiction)

Inspector ID / Agency

_____

_____

Do Not Remove, Alter, or Cover this Placard until Authorized by Governing Authority

PROPOSED

Figure AR605.4 [e]

RESTRICTED USE

Caution: This structure has been inspected and found to be damaged as described below:

_____

_____

_____

_____

Entry, occupancy, and lawful use are restricted as indicated below:

☐ Do not enter the following areas: _____

☐ Brief entry allowed for access to contents: _____

☐ Other restrictions: _____

_____

_____

Facility name and address:

_____

_____

_____

Date _____

Time _____

This facility was inspected under emergency conditions for:

_____ (Jurisdiction)

Inspector ID / Agency

_____

_____

_____

Do Not Remove, Alter, or Cover this Placard until Authorized by Governing Authority

PROPOSED

Figure AR605.5 [e]

UNSAFE

DO NOT ENTER OR OCCUPY
(THIS PLACARD IS NOT A DEMOLITION ORDER)

This structure has been inspected, found to be seriously damaged and is unsafe to occupy, as described below:

_____

_____

_____

_____

_____

Do not enter, except as specifically authorized in writing by jurisdiction. Entry may result in death or injury.

Facility Name and Address:

_____

_____

_____

Date _____

Time _____

This facility was inspected under emergency conditions for:

_____ (Jurisdiction)

Inspector ID / Agency

_____

_____

_____

Do Not Remove, Alter, or Cover this Placard until Authorized by Governing Authority

PROPOSED

CHAPTER AR7
REFERENCES

REFERENCED STANDARDS

ASCE Standards ASCE/SEI 24-05 Flood Resistant Design and Construction
FEMA P-320, Third Edition / August 2008 Taking Shelter From the Storm: Building a Safe Room For Your Home or Small Business, Includes Construction Plans and Cost Estimates
FEMA 361, Second Edition / August 2008 Design and Construction Guidance for Community Safe Rooms
FEMA Technical Bulletin 2, Table 2. Types, Uses, and Classifications of Materials

REFERENCED RESOURCES

(a) *When Disaster Strikes* by the International Code Council, Inc., Seventh Printing: November 2011, copyright 2007
(b) *Form No. M310B* August 2011 APA – The Engineered Wood Association; www.apawood.org
(c) *WFCM Guide to Wood Construction in High Wind Areas for One- and Two-Family* Dwellings – American Forest & Paper Association and the American Wood Council; www.awc.org
(d) FEMA *Home Builder's Guide to Coastal Construction Technical Fact Sheet No. 7.3 Asphalt Shingle Roofing for High Wind Regions*.
(e) *Disaster Mitigation: A Guide for Building Departments* by the International Code Council, Inc., copyright 2009

PROPOSED

Index of Figures:

Figure AR103.3 Post Disaster Building Safety Evaluation Chart [a] 10
Figure AR402.2 Prescriptive wood frame construction method deemed to comply with 100 mph 14
Figure AR402.2.1 Roof Sheathing Attachment Detail 15
Figure AR402.2.2 Gable End Wall Connection Detail 15
Figure AR402.2.3 Gable End Wall Sheathing Detail 16
Figure AR402.2.4 Roof Framing to Wall Connection Detail 16
Figure AR402.2.5 Sheathing Attachment at Elevated Floor Level Detail 17
Figure AR402.2.6a Wall Sheathing Attachment Detail 17
Figure AR402.2.6b Panel Splice Detail 17
Figure AR402.2.8 Wall Sheathing to Sill Plate Connection Detail 18
Figure AR402.2.9 Anchor Bolt Connection Detail 18
Figure AR402.2.10 Top Plate Intersection Detail 18
Figure AR408.2 Roof Shingle Nailing Detail 20
Figure AR605.1 ATC-45 Rapid Evaluation Form 24
Figure AR605.2 ATC-45 Detail Evaluation Form 25
Figure AR605.3 Inspected Placard 27
Figure AR605.4 Restricted Placard 28
Figure AR605.5 Unsafe Placard 29